# BORDEAUX SCREW 0.375



KMC
GLASS

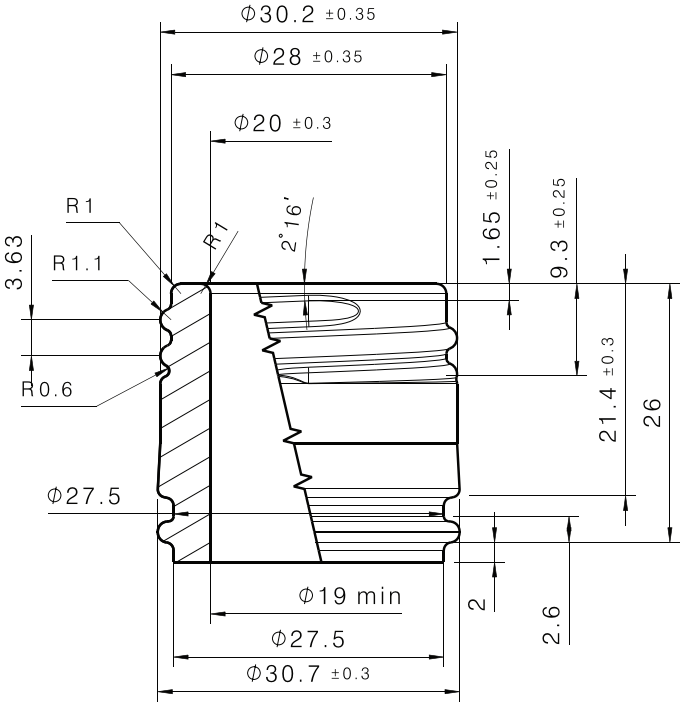


A (4:1)

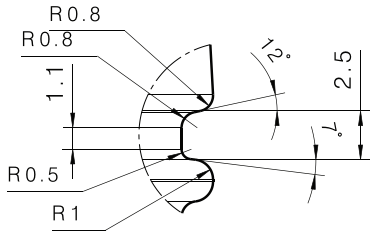


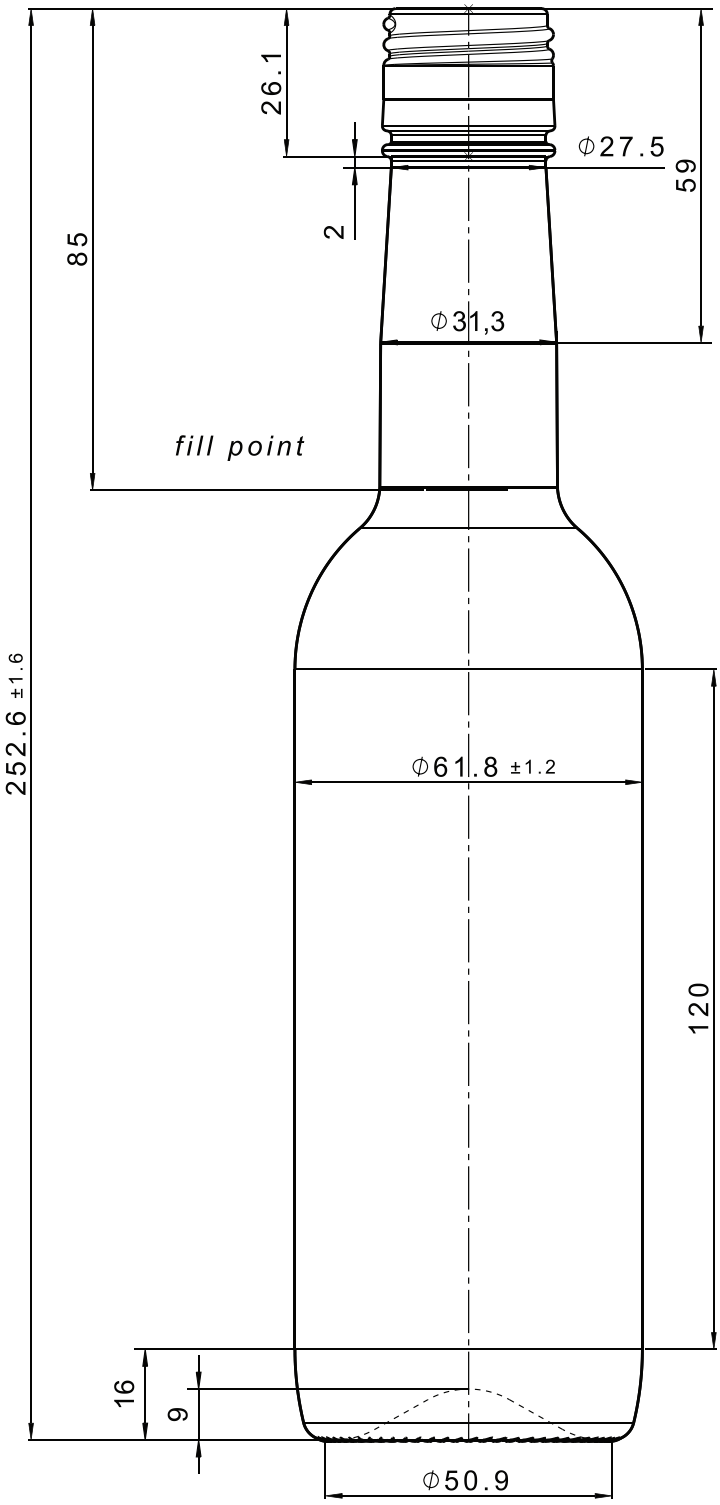


Neck ring MK 622
Finish interchengable with finish P-29-A special

- Bordeaux Screw
- Filling CAP - 375 ml
- Weight - 291 g
- Height - 252.6±1.6 mm
- Diameter - 61.8±1.2 mm
- Finish - BVP 31.5 H 60 (Special)
- Color - Olive Green

www.kmc.glass
sales@kmc.glass

KMC GLASS